California Faucets®

Palomar®

TRADITIONAL FLOOR MOUNT TUB FILLER WITH HANDSHOWER

1303-XX.13M.20
1303-XX.13M.18
1303-XX.20
1303-XX.18

Features

- *Available in 28 finishes including 13 PVD finishes*
- *All brass construction*
- *No additional wall or trap stabilizer kit required*
- *Tub filler maximum flow rate: 15 gpm (56.8 L/min) at 60 psi*
- *Handshower flow rate: 2.0 gpm (7.6 L/min) or 1.8 gpm (6.8 L/min)*
- *Handshower bracket may be placed on COLD or HOT side of body*
- *1/4 turn ceramic disc cartridges*
- *Rough kit (9516) sold separately*

Codes/Standards

Product meets or exceeds the following:

- *ASME A112.18.1/CSA B125.1*
- *CEC (1.8 gpm) / DOE (2.0 & 1.8 gpm)*
- *Commonwealth of MA*
- *EPA WaterSense handshower (2.0 gpm)*
- *ADA compliant (with lever handles)*
- *Local codes may require installation of an upstream tempering valve*

1303-48X.FR SHOWN

XX = DENOTES HANDLE SERIES

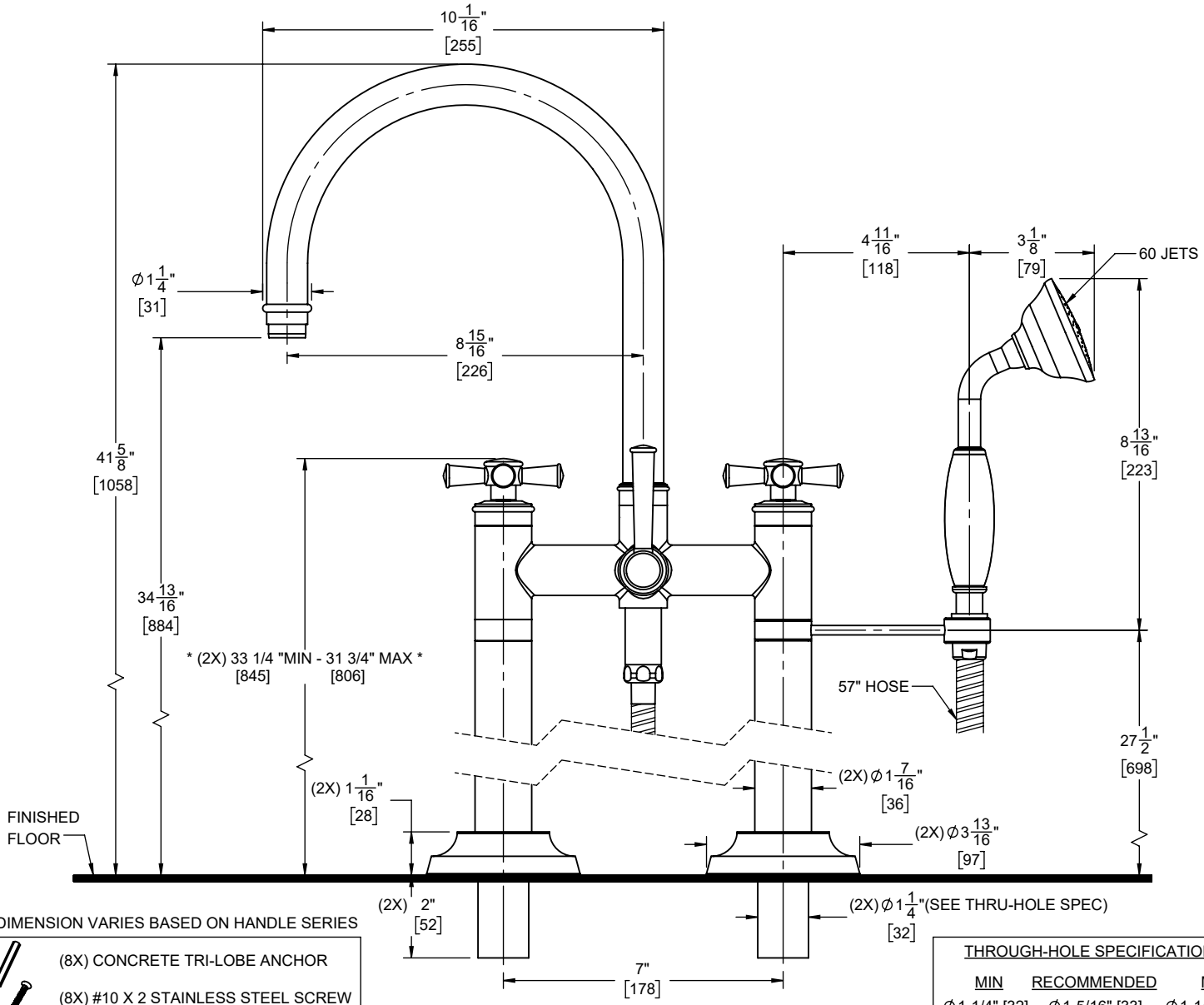

* = DIMENSION VARIES BASED ON HANDLE SERIES

(8X) CONCRETE TRI-LOBE ANCHOR

(8X) #10 X 2 STAINLESS STEEL SCREW

THROUGH-HOLE SPECIFICATIONS		
MIN	RECOMMENDED	MAX
Ø1-1/4" [32]	Ø1-5/16" [33]	Ø1-1/2" [38]

SPECIFICATIONS SUBJECT TO CHANGE WITHOUT NOTICE

DIMENSIONS SHOWN TO NEAREST 1/16"
[DIMENSIONS SHOWN TO NEAREST 1MM]