AXOR

hansgrohe

Metropol Classic
Widespread Faucet 160 with Lever Handles and Pop-Up Drain, 1.2 GPM
Finishes : **polished nickel** Part no. : **31331831**

Description

Features

- handle variant: Lever
- Spray modes: Aerated spray
- Solid brass
- Flow: 1.2 GPM (4.5 L/Min)
- 90° ceramic valves
- Includes pop-up drain

Technology

Product image
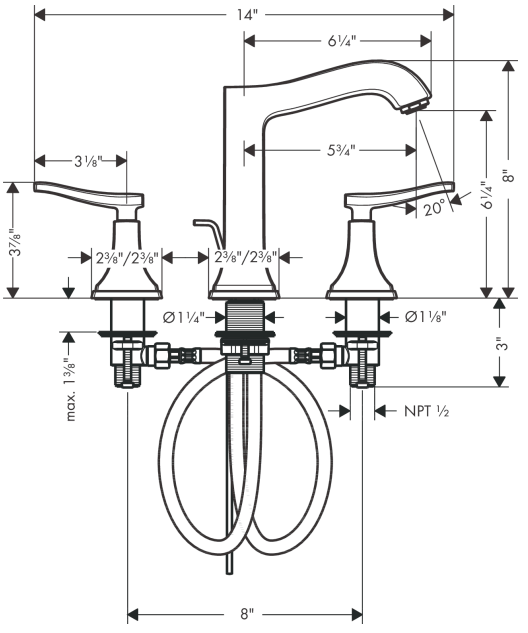
Scale drawing