HORUS

100.40.760

SERIES: NEW WAVE

FEATURES:

- 3 Hole Deck Mounted Bath Mixer
- Waterfall Bath Spout Width 11 ¼”
- Solid Brass
- Flow Rate: 7 GPM

FINISHES
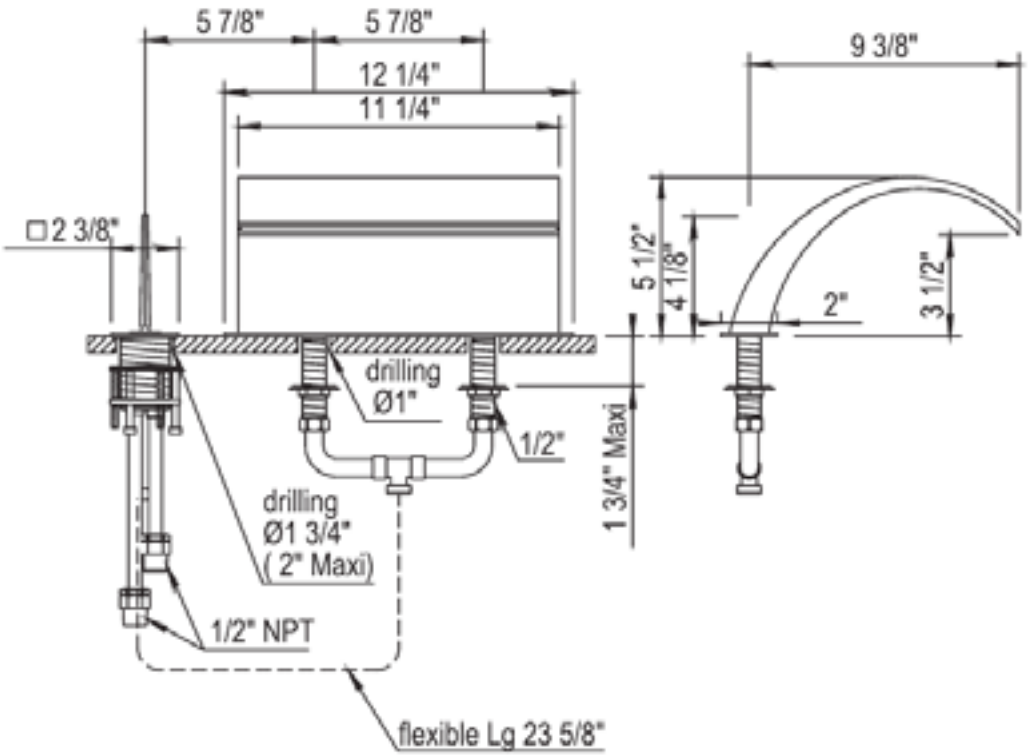
- Polished Chrome **PC**