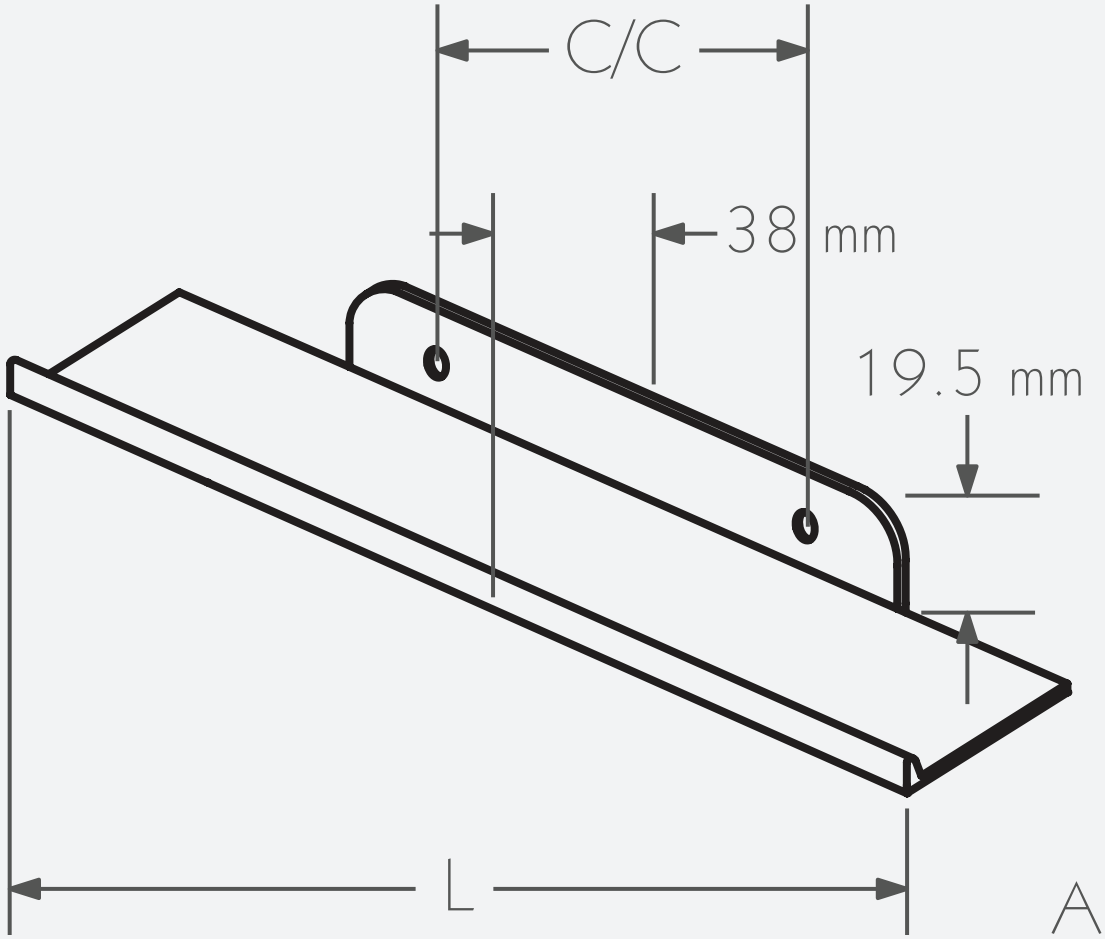

C/C:96mm; L:224mm
C/C:160mm; L:300mm
C/C:256mm; L:376mm
C/C:320mm; L:452mm
C/C:384mm; L:529mm
C/C:448mm; L:605mm
C/C:576mm; L:757mm
C/C:768mm; L:910mm

Also available in custom lengths.