TOWSON BRIDGE FAUCET / 18" ARTICULATED SPOUT / 3PC. SUITE

6150-18-3

- MAX COUNTER THICKNESS 2-3/8"
- MINIMUM INSTALL HOLE SIZE 1-3/8"

A. Supply Hoses - 20" Long with 3/8" Compression Fittings

B. Side Spray Connection with 1/4" NPT Pipe Fitting

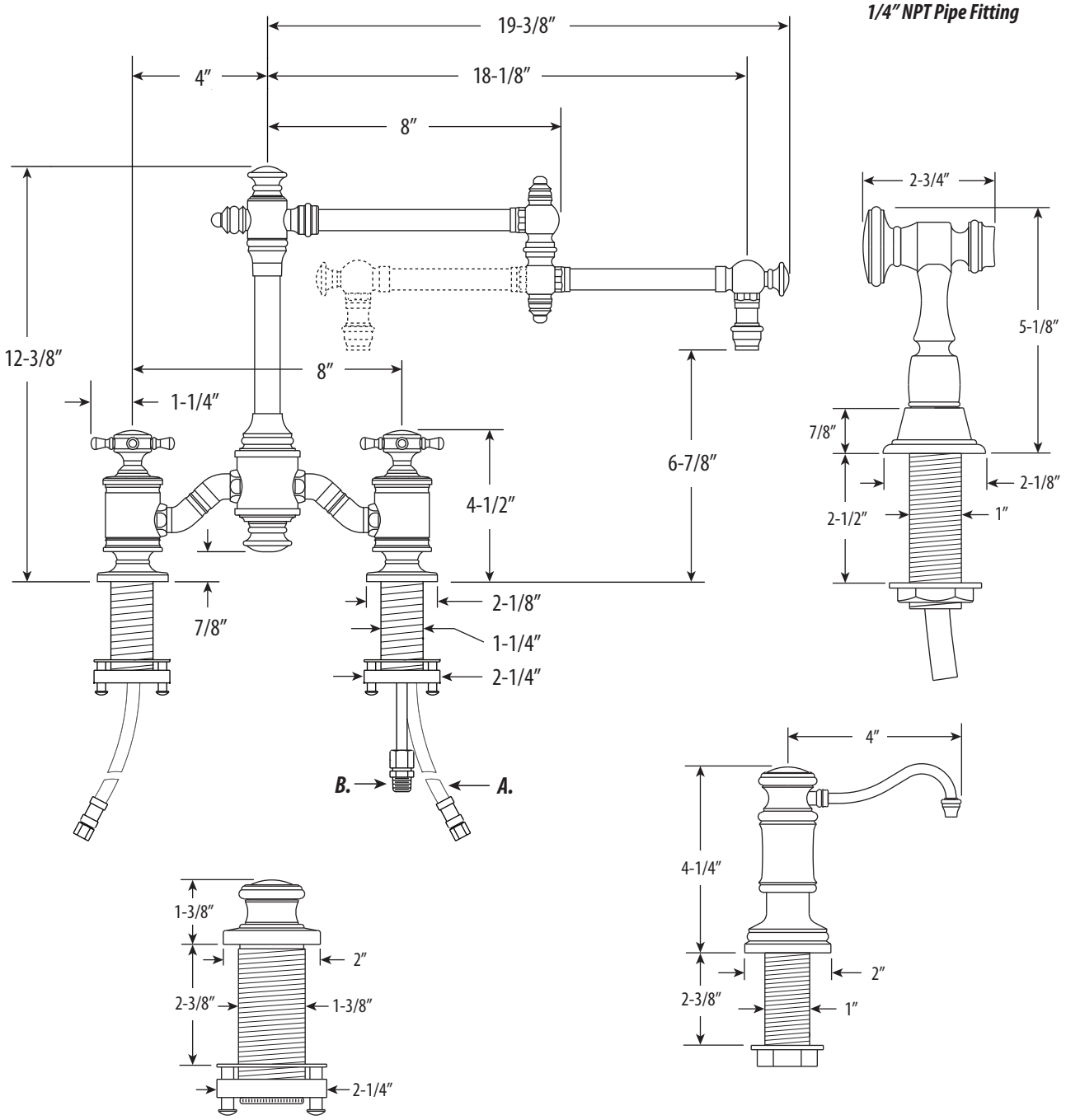

DIMENSIONS MAY VARY AND ARE SUBJECT TO CHANGE. NO RESPONSIBILITY IS ASSUMED FOR USE OF SUPERCEDED OR VOIDED DATA